2-BIT ARITHMETIC LOGIC UNIT

NAME: Laila Tarek Ibrahim ID: 231003520

College of Artificial Intelligence
Digital Logic Course

PROJECT OUTLINE:

1. Project overview and objective.
2. Full adder definition , design and Truth Table.
3. Multiplexer definition, design and Truth table.
4. Schematic diagram of the project (2-bit ALU).
5. Simulation on Proteus.

Project overview and objectives:

The objective of this project is to do an ALU (Arithmetic Logic Unit) which exists in any hardware such as PC that can perform multiple operations as: full adder (to add 2 numbers), full subtractor(to subtract 2 numbers), AND, OR, NOT (logic gates).

Full Adder:

A full adder is a digital circuit component used to perform arithmetic operations, particularly addition. It takes in three input bits: two bits to be added (typically referred to as A and B) and a carry input (Cin) representing the carry from the previous addition. The full adder produces two outputs: a sum (S) and a carry out (Cout).

We can design the full adder by using 2 XOR gates which the first XOR has 2 inputs (A and B) , the other XOR has also 2 inputs (carry in and the output of the first XOR gate) its output will be the Sum (s), 2 AND the first AND has A and B as input , the other AND has carry in and the op of the first XOR as input, and the output of the 2 AND gates are the input of OR gate its output will be the carry (C).

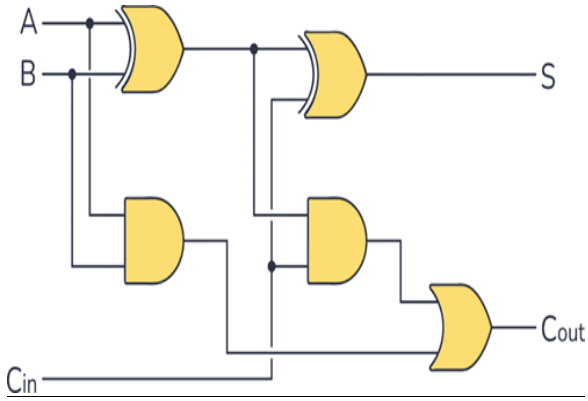

Its Truth Table:

A	B	Cin	S	C
0	0	0	0	0
0	0	1	1	0
0	1	0	1	0
0	1	1	0	1
1	0	0	1	0
1	0	1	0	1
1	1	0	0	1
1	1	1	1	1

Multiplexer:

A multiplexer, is a digital circuit component used to select one of many input signals and route it to a single output. It operates based on control signals that determine which input signal gets transmitted to the output. it has multiple data input lines, one or more control input lines, and a single output line. The number of data input lines determines the selection options available. I will be using a 4-to-1 ic multiplexer (74153) which has four data input lines, allowing it to select one of four input signals to transmit to the output.

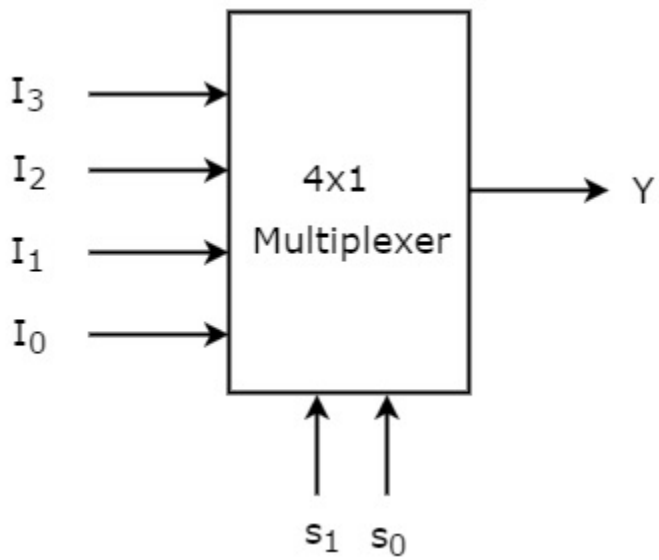

Its Truth Table:

S1	S0	Y
0	0	I0
0	1	I1
1	0	I2
1	1	I3

2-bit ALU Schematic diagram:

1. The NOT gate: inverts every bit input (I have 2 bits so it inverts each one separately according to the selectors 00)

2. The AND/OR gates: and: multiply the 2 bit inputs, or: add the 2 bit inputs (according to the selectors 10 the AND , OR gates works separately)
3. The full adder: add 3 bit inputs A , B and the carry input from the previous operation (according to the selectors 11)
4. The full subtractor: sub 3 bit inputs A, B and the borrow in from the previous operation (according to the selectors 01)

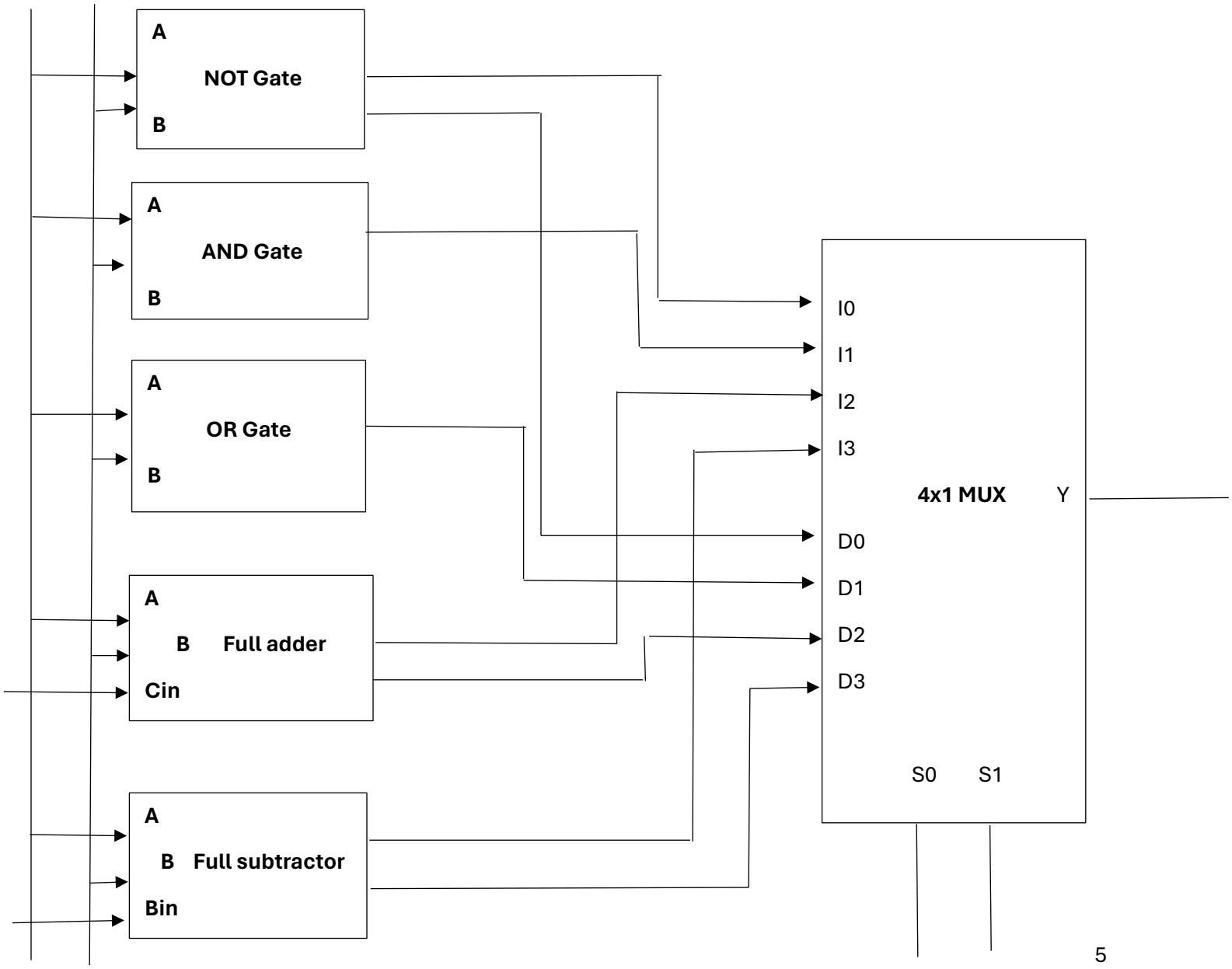

Simulation on Proteus:

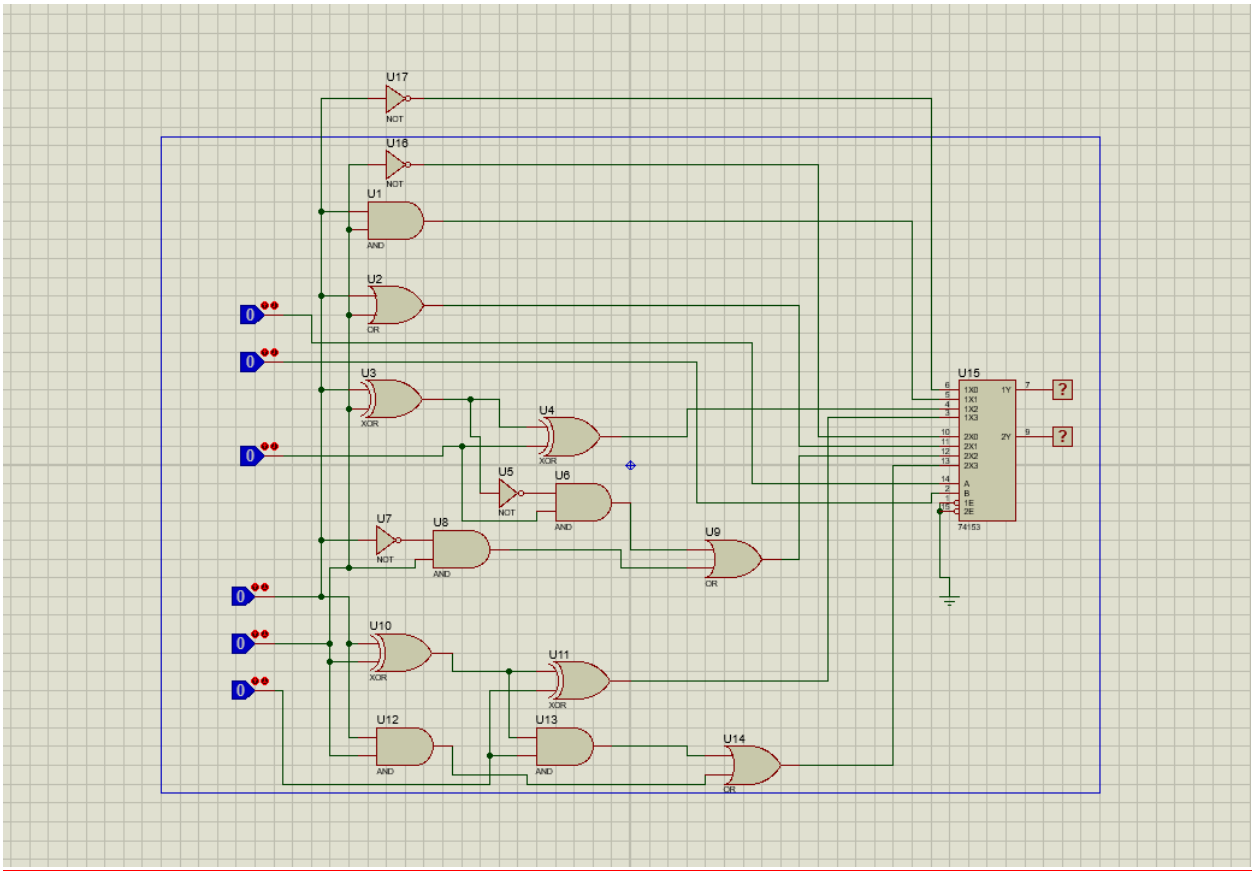

REFERENCES

- https://www.build-electronic-circuits.com/full-adder/
- https://www.tutorialspoint.com/digital_circuits/digital_circuits_multiplexers.htm